CMA DISHMACHINES

L-1X

Chemical Sanitizing Undercounter Dishwasher

Item. # _____

Spec. # _____

NSF

FEATURES:

- 30 racks / 120 covers per hour.
- Economical to operate. Uses only 1.7 gallons of water per cycle.
- All heavy duty 304 stainless steel construction assures long life and years of trouble free operation.
- Unique spray arm system features upper and lower stainless steel wash arms with reinforced end caps.
- Built-in chemical pumps and deliming system assures proper chemical usage.
- Convenient to service "Works-in-a-drawer". All electrical components are attached to a sliding drawer for easy access and service.
- Pumped drain allows for flexible installation. Requires no floor drain.
- Pump purging system improves results by eliminating soil and chemical carryover during rinse cycle.

Optional dishtable, faucet and pre-rinse unit sold separately.

Pumped drain will drain uphill. Requires no floor drain.

Upper and lower rotating wash arms guarantee excellent results.

Convenient To Service. "Works-in-a-drawer", may be removed by unplugging one electrical connection.

Optional pedestal allows the L-1X to be raised up to a full 12" off the floor for easy operator use. Height adjustable from 8" to 12".

AIA # _____

CMA Dishmachines 12700 Knott Avenue Garden Grove, CA 92841• 800-854-6417 • 714-898-8781 • Fax: 714-895-2141 • www.cmadishmachines.com

CMA reserves the right to modify specifications or discontinue models without prior notification.
Printed in the U.S.A.
© 2004 CMA, Inc.

Lit#0109

CMA DISHMACHINES

L-1X

Chemical Sanitizing Undercounter Dishwasher

Spec. #

WARNING: Electrical and plumbing connections need to be made by a qualified service person who will comply with all available Federal, State, and Local Health, Electrical, Plumbing and Safety codes.

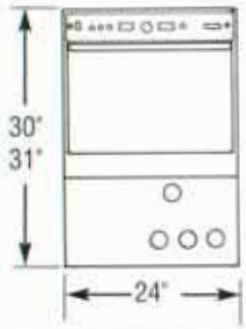

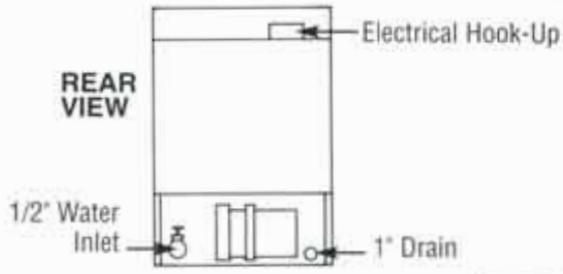

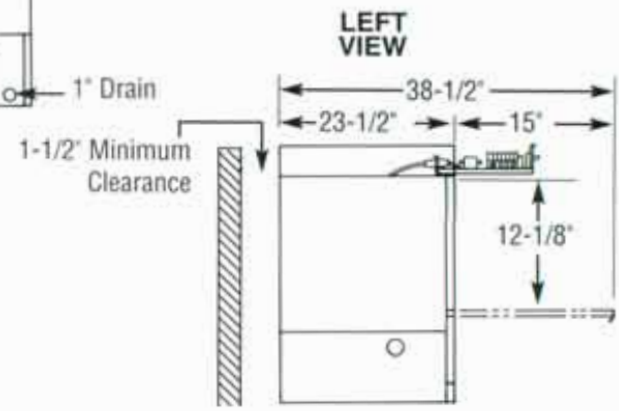

Specifications:

MODEL L-1X	USA	METRIC
OPERATING CAPACITY		
RACKS PER HOUR (NSF RATED)	30	30
OPERATING CYCLE		
WASH TIME-SEC	57	57
RINSE TIME-SEC	48	48
DWELL/PURGE-SEC	15	15
TOTAL CYCLE TIME	120	120
WASH TANK CAPACITY	1.7 GAL.	(6.43 L)
WASH PUMP CAPACITY	35 GPM	(132 LPM)
OPERATING TEMPERATURE		
REQUIRED	120°F	(49°C)
RECOMMENDED	140°F	(60°C)
WATER CONSUMPTION		
PER RACK	1.7 GAL.	(6.43 L)
PER HOUR	40.8 GPH	(154 LPH)
WATER INLET	1/2"	-
DRAIN	1"	-

	USA	METRIC
WASH PUMP MOTORS HP	1	1
DIMENSIONS		
DEPTH	23-1/2"	(59cm)
WIDTH	24"	(61cm)
HEIGHT	30-31"	(76.2-78.2cm)
MAXIMUM CLEARANCE HEIGHT FOR DISHES	12-1/8"	(31cm)
STANDARD DISHRACK	1	1
DIMENSIONS	19-3/4"X19-3/4"	(50X50cm)
ELECTRICAL RATING	**VOLTS**	**AMPS**
	115	16
SHIPPING WEIGHT		
APPROXIMATE	190#	(86kg)

Summary Specifications: Model L-1X

CMA Energy Mizer model L-1X low temperature undercounter chemical sanitizing commercial dishwasher meets NSF, UL and CUL sanitation and construction standards WITHOUT the use of BOOSTER or TANK HEATERS. The model L-1X is constructed entirely of 304 stainless steel. Each unit automatically washes, rinses and sanitizes food service utensils in standard 19-3/4" x 19-3/4" racks. Unit comes standard with upper and lower stainless steel wash arms. The L-1X incorporates a pump purging system that improves results by eliminating soil and chemical carryover during rinse cycle.

Available Options

- Sustainer Heater
- Sanitizer Alarm
- Instant Start
- CMA Temp-Sure™ (Self contained 12kW heater)
- Stainless Steel Legs 6" (set of 4)
- Stainless Steel Pedestal
- 48" Undercounter dishtable
- Alternative electrical available for export

AIA #

CMA Dishmachines 12700 Knott Avenue Garden Grove, CA 92841 • 800-854-6417 • 714-898-8781 • Fax: 714-895-2141 • www.cmadishmachines.com

CMA reserves the right to modify specifications or discontinue models without prior notification.

Lit#0109

Printed in the U.S.A.

© 2004 CMA, Inc