Glastender®

Project: _____	AIA#
Item #: _____ Qty: _____	SIS#
Model #: _____	

Ice Cream Freezers

FRA-24, FRA-36, FRB-24 or FRB-36

FRA-24

NSF c UL us

All faucets are NSF/ANSI 61, Annex G low lead compliant

Standard Features

- All stainless steel exterior with 16 gauge galvanized steel floor.
- Completely integrated design - not just a cabinet with separate drop-in module
- One-piece, seamless top and backsplash
- Adjustable stainless steel bullet feet
- Foamed-in-place insulation
- 6″ diameter seamless welded draining dipper well and faucet
- Six foot grounded cord and plug provided (exits at rear)
- Available sizes to hold one or two 3-gallon containers
- Leg sockets recessed into base

Specifications

Drains
- 1-1/2″ I.P.S. Threaded drain will fit Dearborn part #8033 slipnut and part #W-573P washer.

Faucet
- Accepts 3/8″ cold water leads

Capacity
- 24″ wide model holds one 3-gallon container
- 36″ wide model holds two 3-gallon containers

Electrical
- 120V, 1 phase, 60 Hz, 4.2 full load amps
- Dedicated 15 amp circuit is recommended
- Includes 6 foot grounded cord and plug

Refrigeration
- Operating range -5°F to 10°F
- 1/5 HP, R404A refrigerant

Legs
- 1-5/8″ diameter 16 gauge stainless steel
- Stainless steel bullet feet

Materials
- 20 gauge stainless steel parts include: all components unless otherwise noted
- 22 gauge galvanized steel parts include: wrap on body of freezer unit
- 16 gauge galvanized steel parts include: cabinet floor, condensing unit floor, and leg pads

Glastender, Inc. • 5400 North Michigan Road • Saginaw, MI • 48604-9780
989.752.4275 • 800.748.0423 • Fax 989.752.4444
www.glastender.com

Approval/Notes:

Specifications subject to change without notice. For current specifications please visit our website.

Dimensional Information

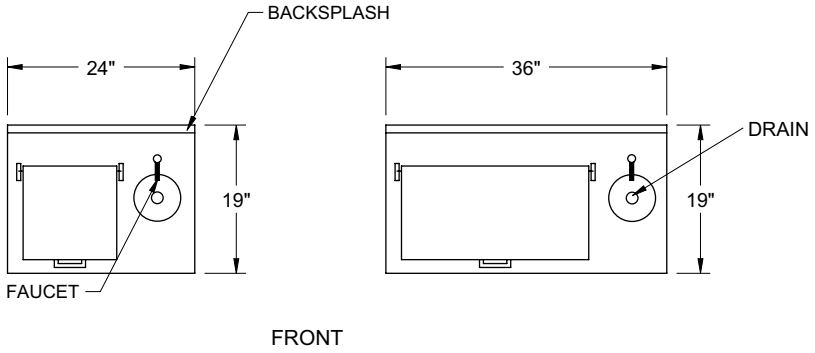

FRA-24 FRA-36

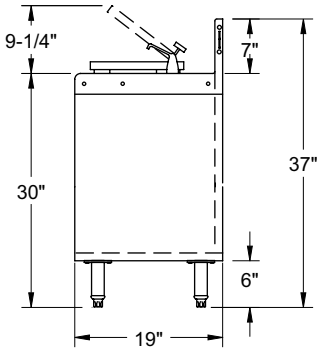

"A" DEPTH

PLAN VIEWS SIDE ELEVATION

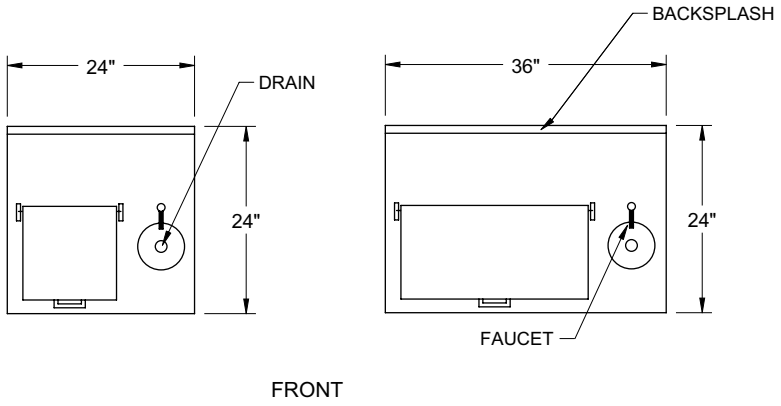

FRB-24 FRB-36

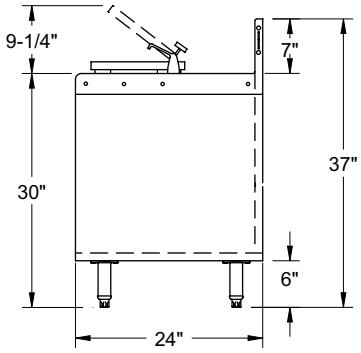

"B" DEPTH

PLAN VIEWS SIDE ELEVATION

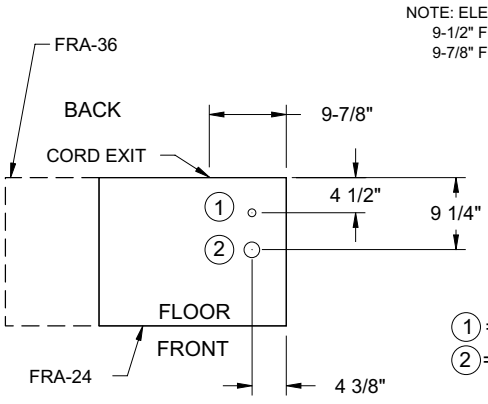

FRA-24 & FRA-36

PLAN VIEWS

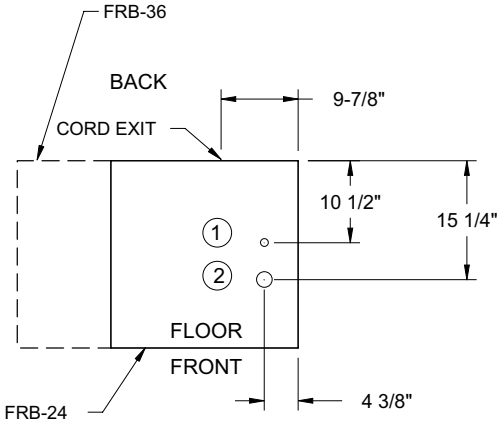

FRB-24 & FRB-36

MECHANICALS

Glastender®
5400 North Michigan Road • Saginaw, MI • 48604-9780
989.752.4275 • 800.748.0423 • Fax 989.752.4444
www.glastender.com

Printed in USA