REFRIGERATOR MANUFACTURER

Turbo air

Turbo Air Speed up the Pace of Innovation

CAUTION!
PLEASE KEEP POWER
SWITCH ON BEFORE
OPERATING THIS EQUIPMENT

Open Display Merchandiser Installation and Operation Manual

Please read this manual completely before attempting to install or operate this equipment!

Extra Deep	*Full Heights*	*Mid Heights*
TOM-36-DX(B)	TOM-40(B)	TOM-40M(B)
TOM-48-DX(B)	TOM-50(B)	TOM-50M(B)
TOM-60-DX(B)		

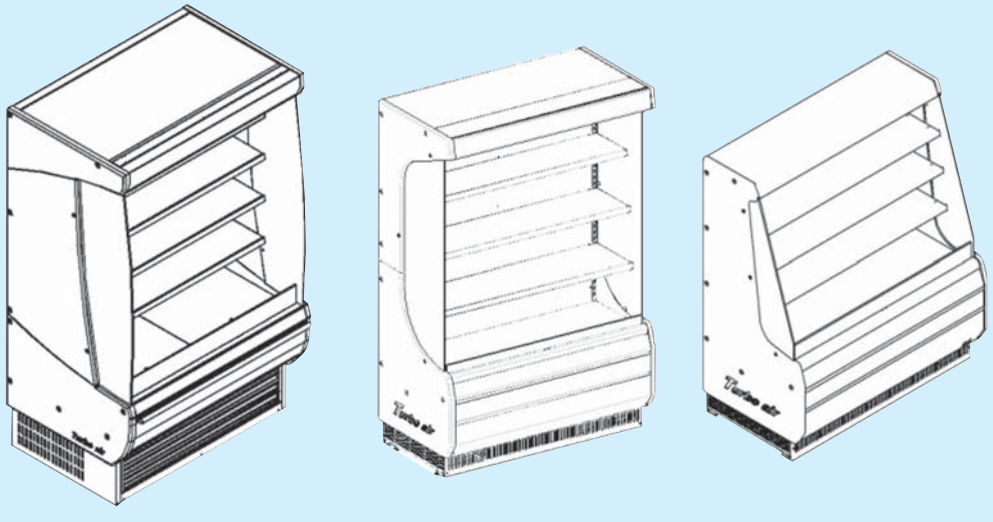

www.turboairinc.com

CONTENTS

INTRODUCTION ..... 3 - 4

SPECIFICATION 5

INSTALLATION INSTRUCTIONS ..... 6 - 7
Inspection for damage
Location of Display
Leveling of Display

OPERATING INSTRUCTIONS ..... 7 - 8
Powe Swich
Light Switch
Temperature Control
Thermometer
How to place product

MAINTENANCE & CLEANING 9
Condenser coil

TROUBLE SHOOTING 10
Display not working
Display case warm
Lights not working

WIRING DIAGRAM 11

WARRANTY STATEMENT ..... 12 - 14

INTRODUCTION

This owner's manual has important information. Please read the entire manual before installing your new Turbo Air Open Display Merchandiser. After reading manual if you have any questions, please fill free to call:

CUSTOMER SERVICE DEPARTMENT

TURBO AIR

4184 E. Conant St.
Long Beach, CA 90808

1-800-381-7770

Please write down model and serial number for making any reference to this unit.

MODEL NUMBER _____

SERIAL NUMBER _____

WARNING

Failure to read this manual completely can result in personal injury or damage to the unit.

Keep manual in a safe place to refer to in the future.

Display should be on dedicated outlet for proper operation.

Thank you for purchasing Turbo Air!

SPECIFICATION

Model	TOM-40*	TOM-50*	TOM-40M*	TOM-50M*
Dimension (W×D×H) in	38.9×26.8×77.9	50.3×26.8×77.9	38.9×26.8×60.0	50.3×26.8×60.0
Electricity	120V/1Ph/60Hz			
Power Input	15A	15A	15A	15A
Compressor	NT6226GK. CAJ9513Z			
Refrigerant	R-404A			
Lighting	10.8W×5	14.4W×5	10.8W×4	14.4W×4
Defrosting	Timed off defrost			
Weight of Case	507 lbs	573 lbs	451 lbs	485 lbs

Model	TOM-36DX*	TOM-48DX*	TOM-60DX*
Dimension (W×D×H) in	36.03×34.21×78.83	48.03×34.21×78.83	60.03×34.21×78.83
Electricity	120V/1Ph/60Hz		
Power Input	15A	15A	15A
Compressor	NT6226GK. CAJ9513Z		
Refrigerant	R-404A		
Lighting	9.6W×6	13.2W×6	16.8W×6
Defrosting	Timed off defrost		
Weight of Case	488 lbs	562 lbs	635 lbs

INSTALLATION INSTRUCTIONS

INSPECTION FOR DAMAGE

Customer is responsible for checking for damage. First inspect crate as soon as it arrives. Prior to signing if crate is damaged make sure you note that on the bill of lading.

If after uncrating there is concealed damage and the crate was in good condition you must call Customer Service at Turbo Air. Concealed damage must be reported within 24 hours of receiving unit. Bill of lading will be requested faxed to claim department. Pictures may be requested of unit and crating.

LOCATION OF OPEN DISPLAY MERCHANDISER

Display is designed to be in an area that is ambient 75 degrees Fahrenheit (dry bulb) or colder and 55 percent relative humidity. If unit is installed in a warm ambient area, the display will not cool effectively. Move the display to the final location before removing shipping skid. Allow 3 inches from back of Display to wall. Condenser is in front of Display. Do not block inlet.

There are four bolts at bottom of display that secure it to shipping skid, remove all four.

LEVELING OF OPEN DISPLAY MERCHANDISER

Four leveling legs are provided for leveling Display. If you do not wish to use levelers they can be turned inwards.

INSTALLATION INSTRUCTIONS

Bottom frame of unit will be on floor. Use a leveler to make sure unit is leveled on all four corners.

If unit is not leveled, drainage of water will not drain properly. Leveling legs can be adjusted accordingly

OPERATING INSTRUCTIONS

After installing unit and all electrical to the Display, Display is ready to start up.

POWER SWITCH :

It is located in front of front panel down in the red area.

LIGHT SWITCH :

It is located in front of front panel down in the green area.

TEMPERATURE CONTROL : The Temperature controller is located near the front right hand side underneath the bottom shelf.

1. The original setti g for the control is Normal.
2. The working temperature is from 37°F to 40°F
3. To lower the temperature, turn the knob slightly to "COLD", To raise the temperature, turn the knob to "WARM"

THERMOMETER : thermometer showing temperature is located on the right side of the back panel under the fourth shelf.

NOTE:

Before placing products to Display wait for unit to reach desired temperature.

Do not place hot product in unit.

OPERATING INSTRUCTIONS

HOW TO PLACE PRODUCT:

Do not overload product on shelves. Do not place product against back wall, due to air flow will be blocked and cause unit not to cool properly.

MAINTENANCE & CLEANING

!!! Always before cleaning Display, unit should be turned off at power switch and lights should be turned off.

Remove product and allow display to reach room temperature

!!! Do not let electrical components get wet.

DISPLAY CASE SHOULD BE CLEANED THOROUGHLY BEFORE FIRST USE.

a. Do not clean with harsh detergents. Use a mild soap

b. Remove all products.

c. Remove shelves and bottom trays.

d. Clean interior with warm water and mild detergent.

e. Wipe with damp cloth. Do not leave residue of soap.

CONDENSER COIL

Condenser coil is located at bottom behind panel.

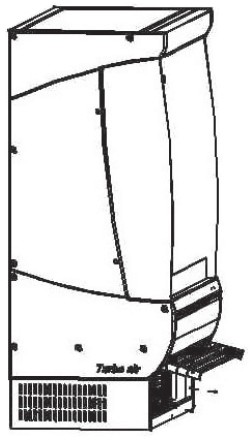

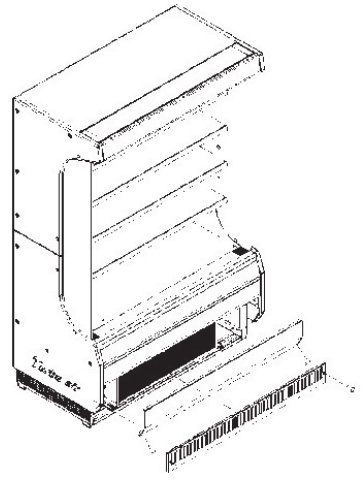

1. Disconnect the electrical power to the unit
2. Remove the front cover and base cover with screwdriver
3. Brush the dirt, lint, etc. from the finned condenser coil.
4. When finished, be sure to replace the front cover and base cover
5. Reconnect the electrical power to the unit.
6. Condenser should be cleaned every 3 months or as needed.

TROUBLE SHOOTING

For any problems with Display please refer to following check list. If still having a problem or need to ask a question please call Customer service at 1-800-381-7770.

DISPLAY NOT WORKING

a. Check to see if breaker is not tripped.

b. Check power going to unit.

c. Check power switch is on.

DISPLAY CASE WARM

a. Check condenser to see if clean

b. Check that air flow inside of unit is not blocked with product.

LIGHTS NOT WORKING

a. Check that light switch is on.

b. Check that light is in lamp holder correctly.

WIRING DIAGRAM

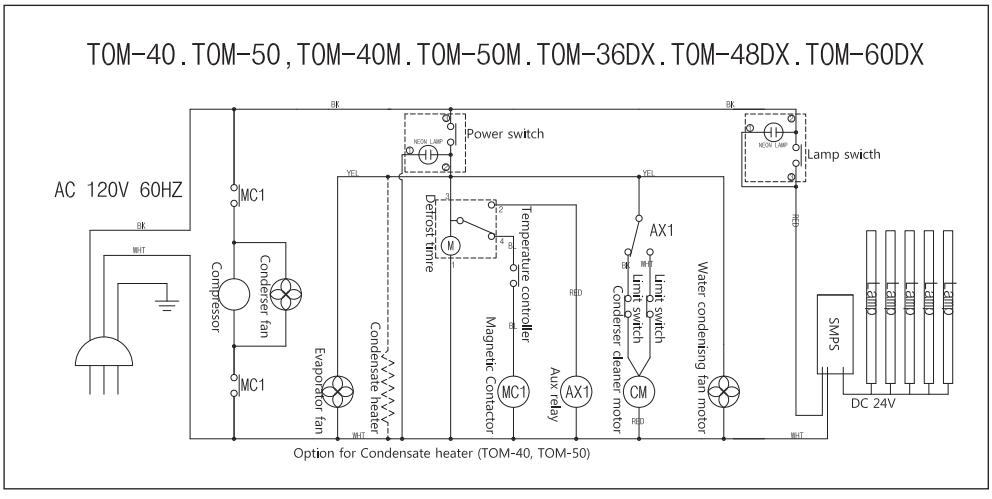

REFRIGERATOR MANUFACTURER Turbo air MANUFACTURING COMPANY

TWO YEAR WARRANTY

Turbo air warrants to the original purchaser of every new Turbo air refrigerated unit, the cabinet and all parts thereof, to be free from defects in material or workmanship, under normal use and service, for a period of two (2) year from the date of original installation or 27 months after shipment date from Turbo air , whichever occurs first.

Any parts covered by this warranty that are examined and determined by Turbo air to have been defective within two (2) year of original installation or twenty seven (27) months after shipment date from manufacturer, whichever occurs first, shall be repaired or replaced as stated below. Turbo air shall be deemed to have fully complied with its obligation under the foregoing warranties by electing either one of the following procedures, at the sole discretion of Turbo air.

1. Furnishing a replacement part, freight collect, in even exchange for the returned part, freight collect.
2. Receiving the defective part, freight collect; repairing it; and returning it, freight collect.

ADDITIONAL THREE YEAR COMPRESSOR WARRANTY

In addition to the (2) two year warranty stated above, Turbo air warrants its hermetically and semi-hermetically sealed compressor to be free from defects in both material and workmanship under normal use and service for a period of three (3) additional years from the date of original installation but not to exceed five (5) years and three (3) months after shipment from manufacturer.

Compressors determined by Turbo air have been defective within this extended time period will, at Turbo air's option, be either repaired or replaced with a compressor or compressor parts of similar design and capacity.

The three (3) year extended compressor warranty applies only to hermetically and semi-hermetically sealed parts of the compressor and does not apply to any other parts or components, including, but not limited to, cabinet, paint finish, temperature control, refrigerant, metering device, driers, motor starting equipment, fan assembly any other electrical component, etcetera.

134A(404A) COMPRESSOR WARRANTY

The five year compressor warranty detailed above will be voided if the following procedure is not carefully adhered to:

1. This system contains R134A refrigerant and polyol ester lubricant. The Polyol ester lubricant has rapid moisture absorbing qualities. If long exposure to the ambient conditions occur, the lubricant must be removed and replaced with new. Listed below are the approved lubricants for the Tecumseh compressors.

1 ICI-Emkarate RL 184
2 Emery-2927-A
3 Mobile Artic 22A

Failure to comply with recommended lubricant specification will void the compressor warranty.

2. Dryer replacement is very important and must be changed when a system is opened for servicing. dryer must be used with XH-9 desiccant.
3. Micron level vacuums must be achieved to insure low moisture levels in the system. 500 microns or lower must obtained.

What is NOT covered by this warranty

Turbo air's sole obligation under this warranty is limited to either repair or replacement of parts, subject to the additional limitations below. This warranty neither assumes nor authorizes any person to assume obligations other than expressly covered by this warranty.

1. WARRANTY IS NOT TRANSFERABLE. This warranty is not assignable and applies only in favor of the original purchaser/user to whom delivered. ANY SUCH ASSIGNMENT OR TRANSFER SHALL VOID THE WARRANTIES HEREIN MADE AND SHALL VOID ALL WARRANTIES, EXPRESS OR IMPLIED, INCLUDING ANY WARRANTY OF MERCHANTABILITY OR FITNESS FOR A PARTICULAR PURPOSE.
2. NO CONSEQUENTIAL DAMAGES. TURBO AIR IS NOT RESPONSIBLE FOR ECONOMIC LOSS; PROFIT LOSS OR SPECIAL, INDIRECT, OR CONSEQUENTIAL DAMAGES, INCLUDING WITHOUT LIMITATION, LOSSES OR DAMAGES ARISING FROM FOOD OR PRODUCT SPOILAGE CLAIMS WHETHER OR NOT ON ACCOUNT OF REFRIGERATION FAILURE.
3. ALTERATION, NEGLECT, ABUSE, MISUSE, ACCIDENT, DAMAGE DURING TRANSIT OR INSTALLATION, FIRE, FLOOD, ACTS OF GOD. TURBO AIR is not responsible for the repair or replacement of any parts that Turbo Air determines have been subjected after the date of manufacture to alteration, neglect, abuse, misuse, accident, damage during transit or installation, fire, flood, or an Act of God.
4. NO IMPLIED WARRANTY OF MERCHANTABILITY OR FITNESS FOR A PARTICULAR PURPOSE. THERE ARE NO OTHER WARRANTIES, EXPRESS, IMPLIED OR STATUTORY, EXCEPT THE TWO(2) YEAR WARRANTY AND THE ADDITIONAL THREE (3) YEAR COMPRESSOR WARRANTY AS DESCRIBED ABOVE. THESE WARRANTIES ARE EXCLUSIVE AND IN LIEU OF ALL OTHER WARRANTIES, INCLUDING IMPLIED WARRANTY AND MERCHANTABILITY OR FITNESS FOR A PARTICULAR PURPOSE. THERE ARE NO WARRANTIES WHICH EXTEND BEYOND THE DESCRIPTION ON THE FACE HEREOF.
5. TRANSPORTATION COSTS. Turbo Air will accept parts covered under this warranty freight collect, provided that shipment has received prior approval. Turbo Air is not responsible for any other transporation costs, but will ship freight collect parts either repaired or replaced under these warranties.
6. WARRANTY CLAIMS. All claims should include: model number of the cooler, the serial number of the cabinet, proof of purchase, date of installation, and all pertinent information supporting the existence of the alleged defect. Any action or breach of these warranty provisions must be commenced within two (2) year after that cause of action has accrued.

REFRIGERATOR MANUFACTURER
Turbo air

4184 E. Conant St.
Long Beach, CA 90808
TEL : 310-900-1000
FAX : 310-900-1077
TOLL FREE : 1-800-627-0032
(U.S.A. & Canada)
Website : www.turboairinc.com

Warranty Claims...

All claims for parts or labor must be made directly thorough Turbo Air.
All claims should include: model number of the unit, the serial number of the cabinet, proof of purchase, date of installation, and all pertinent information supporting the alleged defect.
In case of compressor replacement under warranty, either compressor or compressor tag must be returned to Turbo Air along with above listed information.
Failure to comply with warranty policies will result in voiding claims.

Two Year Parts & Labor Warranty...

Turbo Air warrants all new refrigerated components, the cabinet and all parts, to be free from defects in materials or workmanship, under normal and proper use and maintenance service as specified by Turbo Air and upon proper installation and start-up in accordance with the instruction packet supplied with each Turbo air unit. Turbo Air's obligation under this warranty is limited to a period of two (2) year from the date of original installation or 27 months after shipment date from Turbo Air, whichever occurs first.
Any part, covered under this warranty, that are by Turbo Air to have been defective within two (2) year of original installation or twenty seven (27) months after shipment date from manufacturer, whichever occurs first, is limited to the repair or replacement, including labor charges, of defective parts or assemblies. The labor warranty shall include standard straight time labor charges only and reasonable travel time, as determined by Turbo Air.

Additional Three Year Compressor Warranty...

In addition to the two (2) year warranty stated adove, Turbo Air warrants its hermetically sealed compressor to be free from defects in both material and workmanship under normal and proper use and maintenance service for a period of three (3) additional years from the date of original installation, but not to exceed five (5) years and three(3) months after shipment from the manufacturer.
Compressor determined by Turbo Air to have been defective within this extended period will, at Turbo Air's discretion, be either repaired or replaced with a compressor or compressor parts of similar design and capacity.
The three (3) year extended compressor warranty applies only to hermetically sealed parts of the compressor and does not apply to any other parts or components, including, but not limited to, cabinet, paint finish, temperature control, refrigerant, metering device, driers, motor starting equipment, fan assembly or and other electrical components, etcetera.

404A / 134a Compressor Warranty...

The five-year compressor warranty detailed above will be void if the following procedure is not carefully adhered to:

1. This system contains R404A or R134a refrigerant and polyol ester lubricant. The polyol ester lubricant has rapid moisture absorbing qualities.
2. Drier replacement is very important and must be changed when a system is opened for servicing. A620 copper drier or better is highly recommended.
3. Micron level vacuums must be achieved to insure low moisture levels in the system. 500 microns or lower must be obtained.
4. When compressor is grounded, suction drier and 620 drier or better must be replaced.
5. Compressor must be obtained through Turbo Air, unless otherwise specified in writing, through Turbo Air's warranty department.

404A / 134a Compressor Warranty...

Turbo Air's sole obligation under this warranty is limited to either repair or replacement of parts, subject to the additional limitations below. This warranty neither assumes nor authorizes any person to assume obligations other than those expressly covered by this warranty.
NO CONSEQUENTIAL DAMAGES. TURBO AIR IS NOT RESPONSIBLE FOR ECONOMIC LOSS; PROFIT LOSS; OR SPECIAL, INDIRECT, OR CONSEQUENTIAL DAMAGES, INCLUDING WITHOUT LIMITATION, LOSSES, OR DAMAGES ARISING FROM FOOD OR PRODUCT SPOILAGE REGARDLESS OF WHETHER OR NOT THEY RESULT FROM REFRIGERATION FAILURE.
WARRANTY IS NOT TRANSFERABLE, This warranty is not assignable and applies only in favor of the original purchaser/user to whom delivered. ANY SUCH ASSIGNMENT OR TRANSFER SHALL VOID THE WARRANNTIES HEREIN AND SHALL VOID ALL WARRANTIES, EXPRESS OR IMPLIED, INCLUDING ANY WARRANTY OF MERCHANTABILITY OR LABOR COVERAGE FOR COMPONENT FAILURE OR OTHER THE WARRANTY PACKET PROVIDED WITH THE UNIT.
ALTERATION, NEGLECT, ABUSE, MISUSE, ACCIDENT, DAMAGE DURING TRANSIT OR INSTALLATION, FIRE, FOOD, ACTS OF GOD. Turbo Air is not responsible for the repair or replacement of any parts that Turbo Air determines have been subjected after the date of manufacture to alteration, neglect, abuse, misuse, accident, damage during transit or installation, fire, flood, or act of GOD.
IMPROPER ELECTRICAL CONNECTIONS. TURBO AIR IS NOT RESPONSIBLE FOR THE REPAIR OR REPLACEMENT OF FAILED OR DAMAGED COMPONENTS RESULTING FROM ELECTRICAL POWER FAILURE, THE USE OF EXTENSION CORDS, LOW VOLTAGE, OR VOLTAGE DROPS TO THE UNIT. NO IMPLIED WARRANTY OF MERCHANTABILITY OR FITNESS FOR A PARTICULAR PURPOSE; THERE ARE NO OTHER WARRANTIES, EXPRESSED, IMPLIED OR STATUTORY, EXCEPT THE TWO (2) YEAR PARTS & LABOR WARRANTY AND THE ADDITIONAL THREE (3) YEAR COMPRESSOR WARRANTY AS DESCRIBED ABOVE. THESE WARRANTIES ARE EXCLUSIVE AND IN LIEU OF ALL OTHER WARRANTIES, INCLUDING IMPLIED WARRANTY AND MERCHANTABILITY OR FITNESS FOR A PARTICULAR PURPOSE. THERE ARE NO WARRANTIES, WHICH EXTEND BEYOND THE DESCRIPTION ON THE FACE HEREOF.
Outside U.S.and Canada; This warranty does not apply to, and Turbo Air is not responsible for, any warranty claims made on products sold or used outside the continent of the United States and Canada.

New Extended Warranty policy applies to all units sold by Turbo Air starting Dec.1, 2012