Electrolux

EM Series
2 Open Gas Burner Top 12"

ITEM # _____

MODEL # _____

PROJECT NAME # _____

SIS # _____

AIA# _____

EM Series

2 Open Gas Burner Top 12"

169000 (ACG12)	2 OPEN GAS BURNER TOP 12" (305 mm)
169034 (ACG12T)	2 OPEN GAS BURNER TOP 12" (305 mm) WITH THERMOCOUPLES

Short Form Specification

Item No. _____

Unit to be Electrolux Two (2) Open Gas Burner Top ___ without flame failure safety on open burners (model # 169000), ___ with flame failure safety on open buners (model # 169034). Individually controlled high efficiency 32,500 BTU (9.5 kW) Flower Flame burners. Control knobs provide smooth, continuous rotation from min to max. Suitable for natural gas or propane gas. Cast iron pan supports 12" x 12" (305 mm x 305 mm). Full width crumb tray below the burners. All major components can be accessed from the top and front of the appliance for ease of maintenance. Worktop in AISI 304 Stainless Steel. Front and side panels in Stainless Steel with Scotch Brite finish. Special heavy duty chrome plated knobs for durability and easy cleaning. The configuration of bezels and knobs provides high level of protection against water infiltrations. Right-angled side edges to allow flush fitting between units. Supplied with 4" (102 mm) height adjustable, removable legs. Unit may be installed on refrigerated base or open cupboard.

Intertek Intertek

Approval: _____

Main Features

- Two (2) individually controlled high efficiency 32,500 BTU (9.5 kW) Flower Flame gas burners.
- Control knobs provide smooth, continuous rotation from min to max.
- No gaskets and removable one-piece venturis and burners for easy cleaning.
- The geometrics of the venturis and cast iron burners provides the maximum level of heating efficiency.
- The cast iron burners are anti-clogging.
- The cast iron pan supports 12" x 12" (305 mm x 305 mm), thanks to the special configuration, allow for even small pots and pans to be placed over the flame.
- The cast iron pan supports allow to slide pots and pans from section to section as well as to protect the pilot from spilled food and debris.
- Full width crumb tray below the burners captures all overflow and debris and can be easily extracted for dumping and cleaning.
- Unit with thermocouple and flame failure device protects against accidental extinguishing of the flame (model # 169034).
- All major components can be accessed from the top and front of the appliance for ease of maintenance.
- Worktop in AISI 304 Stainless Steel.
- Front and side panels in Stainless Steel with Scotch Brite finish.
- Special heavy duty chrome plated knobs for durability and easy cleaning.
- The configuration of bezels and knobs provides high level of protection against water infiltrations.
- Right-angled side edges to allow flush fitting between units.
- Provided with kit for side-by-side connection between units for minimizing gaps and possible dirt traps.
- Supplied with 4" (102 mm) height adjustable, removable legs.
- Unit may be installed on refrigerated base by removing the legs and inserting the special pins (optional accessory model # 169048).
- Unit may be installed on open cupboard by removing the legs and inserting the srews provided as standard with the open cupboards.
- Included Accessories: propane converter kit, pressure regulator and main shut off valve.

Optional Accessories

- 4 pins kit for equipment to be installed on Refrigerator/freezer bases — PNC 169048 ❑

Electrolux Professional Inc.
www.electroluxusa.com/professional
www.electrolux.com/foodservice
foodservice@electrolux.com

Electrolux
EM Series
2 Open Gas Burner Top 12"

Electrolux

EM Series
2 Open Gas Burner Top 12"

Front

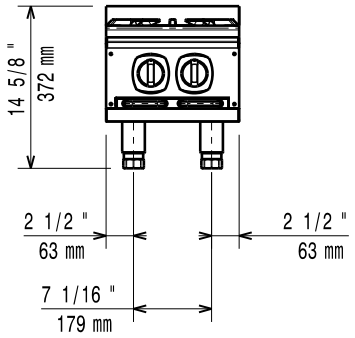

Top

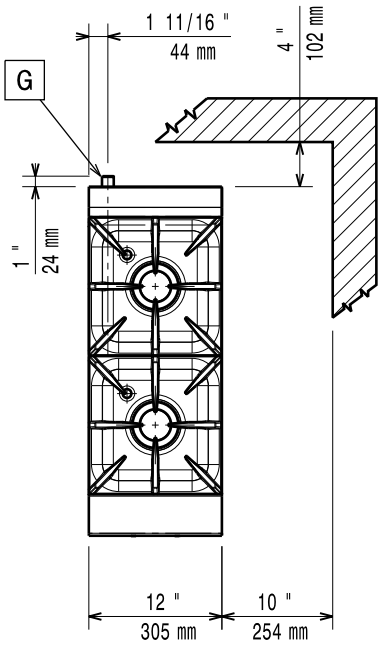

G = Gas connection

Side

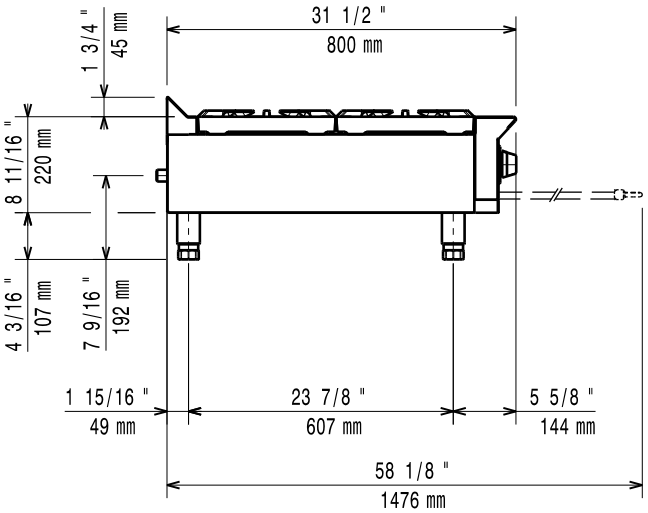

Gas

Gas Power:	
169000(ACG12)	65000 Btu/hr (19 kW)
169034(ACG12T)	65000 Btu/hr (19 kW)
Gas Inlet:	3/4" NPT
Natural Gas Pressure:	3''w.c. (7 mbar)
Propane Gas Pressure:	7''w.c. (18 mbar)

Key Information

External dimensions, Width	12 1/64" (305 mm)
External dimensions, Depth	31 1/2" (800 mm)
External dimensions, Height	14 5/8" (372 mm)
Net weight:	66 lbs (30 kg)
Shipping width:	35 7/16" (900 mm)
Shipping depth:	14 " (355 kg)
Shipping height:	25 1/2" (648 mm)
Shipping weight:	77 lbs (35 kg)
Shipping volume:	7.31 ft³ (0.21 m³)

* The rear and side clearances shown on the diagram indicate the minimum distances reccomeneded from the appliance to combustible surfaces.

The company reserves the right to make modifications to the products without prior notice. All information correct at time of printing.

2011.10.14