Engineered to Perform, Built to Last.
SOUTHBEND

DIRECT STEAM TRI-LEG TILTING KETTLE

Job _____ Item# _____

MODEL	CAPACITY	
KDLT-20	20 Gallon	76 Liter
KDLT-30	30 Gallon	114 Liter
KDLT-40	40 Gallon	152 Liter
KDLT-60	60 Gallon	227 Liter
KDLT-80	80 Gallon	303 Liter
KDLT-100	100 Gallon	379 Liter

SPECIFICATIONS:

Shall be a Model _____, direct steam connected tri-leg tilting kettle. A double wall kettle interior shall form a steam jacket around the lower 2/3 of the kettle. The bottom of the kettle shall be of hemispherical design for superior heat circulation.

The tri-leg mounting frame of stainless steel pipe shall support the kettle and tilt console and conceal the steam piping, house the steam control valve and tilt mechanism. Each leg shall be fitted with a 4 hole adjustable flanged foot for securing to the floor. The tilt mechanism shall permit the kettle to tilt forward a full 90° for complete emptying. The tilting mechanism shall be self locking for positive stop action.

Construction shall be all welded #4 finish stainless steel type 304. The liner on models 20 through 40 gallon shall be standard 316 for high acid content cooking.

OPERATION SHALL BE BY:

Direct steam at a minimum of 5 PSI *(34kPa)* and a maximum of 35 PSI *(241kPa).*

OPTIONAL ITEMS AT EXTRA COST:

- ❑ Type 316 stainless steel liner for high acid content cooking on models 60 through 100 gallon
- ❑ 50 PSI *(345kPa)* high pressure operation for higher cooking temperature
- ❑ 1-1/2" *(38 mm)* draw off valve
- ❑ 2" *(50 mm)* draw off valve
- ❑ 3" *(76 mm)* draw off valve
- ❑ 2" *(50 mm)* dairy valve
- ❑ 3" *(76 mm)* dairy valve
- ❑ Spring assist hinged stainless steel cover
- ❑ Etched gallon markings
- ❑ Etched litre markings
- ❑ Pan carrier (20 - 30 gallon)

ACCESSORIES:

- ❑ One piece stainless steel lift off cover
- ❑ Triple basket assembly
- ❑ Steam trap assembly (consisting of steam trap, check valve, Y strainer
- ❑ Single pantry faucet with swing spout
- ❑ Double pantry faucet with swing spout
- ❑ Perforated strainer for draw off valve
- ❑ Solid disc for draw off valve
- ❑ Strainer hook
- ❑ Graduated measuring strip
- ❑ Pan carrier (40 - 100 gallon)

Models: ☐ **KDLT-20** ☐ **KDLT-30** ☐ **KDLT-40** ☐ **KDLT-60** ☐ **KDLT-80** ☐ **KDLT-100**

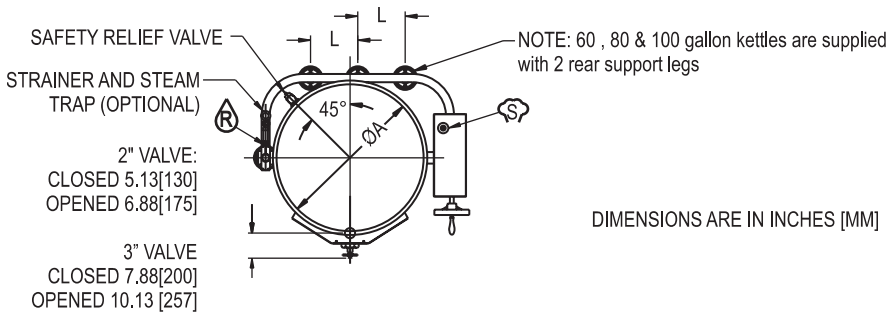

DIMENSIONS ARE IN INCHES [MM]

FLANGED FOOT DETAIL
4 EQUALLY SPACED
Ø7/16" [11mm] HOLES
ON 3 [76] B.C.

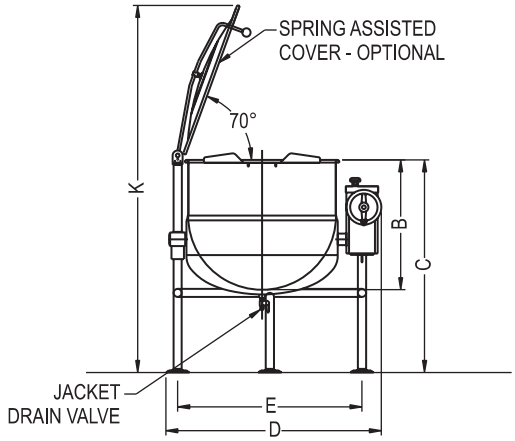

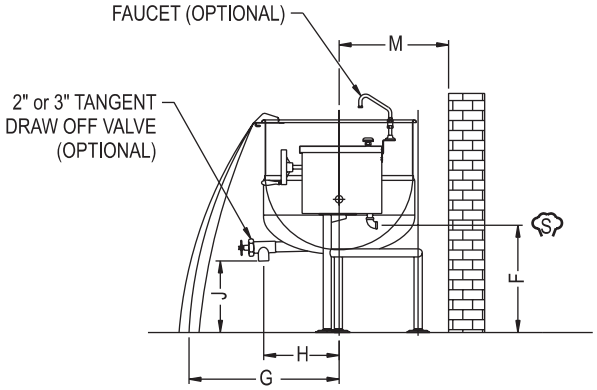

DIMENSIONS

Model	Capacity	Units	A	B	C	D	E	F	G	H(2")	H(3")	J(2")	J(3")	K	L	M
KDLS-20	20 gallons (76 liters)	in (mm)	21" (533)	18" (457)	37" (940)	34.75" (885)	28.5" (724)	22" (559)	25.63" (651)	12" (305)	13.25" (337)	17" (432)	16.5" (419)	59.5" (1512)	N/A	15.38" (391)
KDLS-30	30 gallons (114 liters)	in (mm)	24" (610)	20" (508)	37" (940)	37.75" (960)	31.5.5" (800)	20.75" (527)	27.13" (689)	12.5" (317)	14.25" (362)	15" (381)	14.5" (368)	62.5" (1588)	N/A	15.38" (391)
KDLS-40	40 gallons (152 liters)	in (mm)	26" (660)	22.5" (572)	37" (940)	39.75" (1010)	33.5" (850)	20.25" (514)	28.63" (727)	13" (330)	15.25" (387)	12.5" (318)	12" (305)	64" (1626)	N/A	16.38" (416)
KDLS-60	60 gallons (227 liters)	in (mm)	29.5" (749)	26" (660)	40.5" (1029)	43.25" (1100)	37" (940)	21.5" (546)	30.13" (765)	13.75" (350)	15.5" (394)	14.5" (368)	14" (356)	74" (1879)	9.5" (241)	18.38" (467)
KDLS-80	80 gallons (303 liters)	in (mm)	33" (838)	28" (711)	42.5" (1080)	46.75" (1085)	40.5" (1030)	20" (508)	32.63" (828)	14.5" (368)	16.25" (413)	12.5" (318)	12" (305)	76" (1930)	11" (279)	19.88" (505)
KDLS-100	100 gallons (379 liters)	in (mm)	35.5" (902)	30" (762)	42.5" (1080)	49.25" (1251)	43" (1092)	27" (686)	39.25" (997)	18" (457)	20.25" (514)	10.5" (267)	10" (254)	79" (2007)	12.5" (318)	21.5" (546)

SERVICE CONNECTIONS

(S) – STEAM SUPPLY: 3/4" IPS (19 mm)

(R) - CONDENSATE RETURN: 1/2" IPS (13 mm)

INTENDED FOR COMMERCIAL USE ONLY.
NOT FOR HOUSEHOLD USE.

Engineered to Perform, Built to Last.
SOUTHBEND
1100 Old Honeycutt Road, Fuquay-Varina, NC 27526
(919) 762-1000 www.southbendnc.com