Item No. _____
Quantity _____

BEVERAGE-AIR

3779 Champion Blvd., Winston-Salem, NC 27105
1-888-845-9800 Fax# 1-336-245-6453
http://www.Beverage-Air.com

Commercial Refrigeration Equipment
General Specification

REACH-IN WARMING CABINETS
REACH-IN & PASS-THRU, SOLID DOORS

MODELS:
PH1-1S
PH2-1S
PH1-1S-PT (PASS-THRU)
PH2-1S-PT (PASS-THRU)

CABINET CONSTRUCTION
- Exterior—Cabinet front and doors are constructed of heavy gauge stainless steel for years of extended use.
- Interior— Aluminum interior and sides.
- Insulation—Foamed-in-place CFC and HCFC-free polyurethane insulation.

OPERATIONAL INDICATOR PANEL
- Operational indicator panel contains thermometer and adjustable thermostat control which is accurately calibrated from 80°F to 180°F.

HEATING SYSTEM
- Strip type 750-watt heating elements, operating on 208-240/60/1, having a total of 1500 watts per compartment.
- Externally mounted blower system maintains even temperature through out the food zone area.
- Manually controlled humidity vents are provided in the top of the cabinet.

DOORS
- Self-closing doors are securely mounted on rugged cam-lift hinges.
- Each door has a heavy-duty cylinder lock and self-adjusting magnetic gasket.
- Full perimeter of the door opening has a stainless steel door jamb.
- Interior door liner is constructed of heavy gauge stainless steel.
- Doors feature safety grip handles.

SHELVING
- Heavy-duty wire shelves are adjustable in one-inch increments.
- A wide door opening allows the use of optional pan slide types for 12” x 20”, 18” x 26”, and 14” x 18” pans and trays.

MODEL FEATURES
- Adjustable thermostat
- Dial Thermometer
- 6” adjustable, black legs
- Stainless steel case front and door(s)
- Heavy duty cam lift hinges
- Adjustable wire shelves
- Safety grip handles
- Self-closing doors with safety stops
- Door opening accepts 12” x 20”, 18” x 26”, and 14” x 18” pans and trays
- Heavy-duty cylinder locks
- Humidity vent(s) manually operated
- One piece self-adjusting magnetic door gaskets
- Stainless steel door liner

PH1-1S
PH1-1S-PT (PASS THRU)

PH2-1S
PH2-1S-PT (PASS THRU)

ELECTRICAL
- 15 AMP breaker required for Single Door units
- 20 AMP breaker required for Double Door units

***Note**: Not all markings may apply to all model variations.

Available From:

Model Specified	_____	**Store#**	_____
Location	_____	**Quantity**	_____

BEVERAGE-AIR

Reach-In Warming Cabinets

Models: PH1-1S, PH2-1S, PH1-1S-PT, PH2-1S-PT
(PT) Pass-Thru Models

COMMON FEATURES

MODEL	PH1-1S 1 Section	PH2-1S 2 Section	PH1-1S-PT 1 Section *Pass-Thru*	PH2-1S-PT 1 Section *Pass-Thru*
EXTERNAL DIMENSIONAL DATA				
Length Overall (inches) / (mm)	26 1/2" / 673	52 1/8" / 1324	26 1/2" / 673	52 1/8" / 1324
Depth Overall (inches) / (mm) *Includes handle(s)*	34 1/2" / 876	36" / 914	34 1/2" / 876	36" / 914
Height Overall— (inches) / (mm) *Includes adjustable legs*	84" / 2134	84" / 2134	84" / 2134	84" / 2134
Number of doors	1	2	2	4
Depth with Door Open 90 °	58 1/2"	65 1/4"	84 5/8"	98 1/8"
Clear Door Width	21 1/8"	21 1/8"	21 1/8"	21 1/8"
Clear Full Door Height	55 1/4"	55 1/4"	55 1/4"	55 1/4"
INTERNAL DATA				
NET Capacity (cubic ft.) / (Liters)	21.5 / 609	46.5 / 1317	23.7 / 671	48 / 1359
Number of Shelves	3	6	3	6
Shelf Area (square feet)	17.1	36	17.1	36
ELECTRICAL DATA				
Cabinet Voltage	208-240/60/1	208-240/60/1	208-240/60/1	208-240/60/1
Max. Fuse Size T.D.	15 Amps	20 Amps	15 Amps	20 Amps
Feed Wires	2	2	2	2
Heater Watts per section (@ 240V)	1500	1500	1500	1500
Total Wattage (Heaters & Fan @ 240V)	1500	3000	1500	3000
Total Amperes	6.3	13.0	6.3	13.0
WEIGHT DATA				
Gross Weight (Crated lbs)	310	540*	355	620*
Gross Weight (Crated kg)	141	245	161	281

***Note:** Dimensional tolerance +- 1/4" Metric dimensions (MM)
***Note:** For approximate Pass-Thru weights add 15%.

PLAN VIEWS

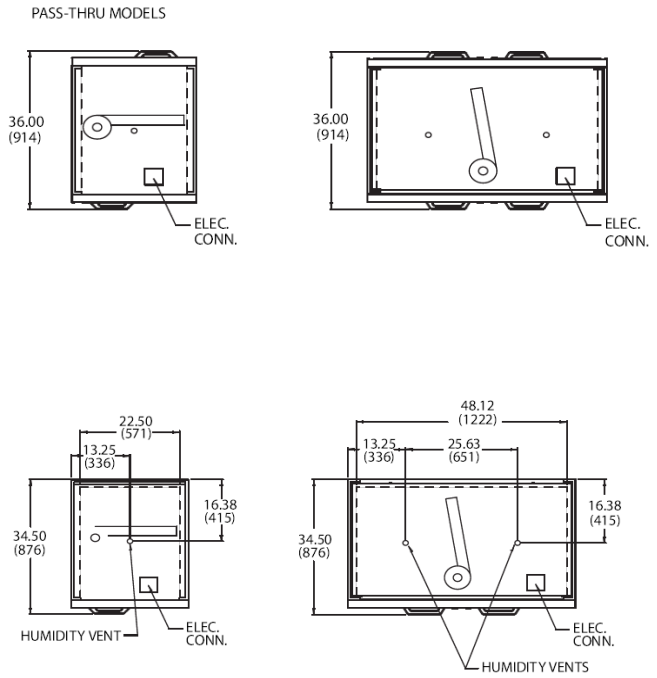

NOTE: If cabinet is located directly against wall an all around clearance of 2" is required, and a minimum clearance of 10" under ceiling.

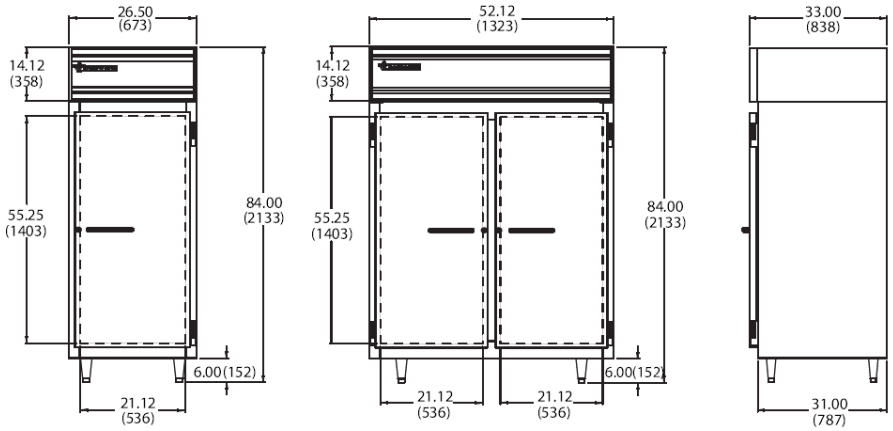

BEVERAGE-AIR® CORPORATION
3779 Champion Blvd. • Winston-Salem, NC 27105 USA • (336) 245-6400 • Fax (336) 245-6453 • (888) 845-9800 • www.beverage-air.com

Specifications are subject to change without prior notice. 06/10
Tundra Specialties