Howard-McCray

# 40E Series - Endless Design
# Curved Glass - Fish and Poultry

• PRODUCT SPECIFICATIONS SHEETS

• Cases are designed to operate at 75 degrees Fahrenheit and 55% relative humidity

| Self-Contained<br>Remote | SC-CFS40E-4C<br>R-CFS40E-4C | SC-CFS40E-6C<br>R-CFS40E-6C | SC-CFS40E-8C<br>R-CFS40E-8C |
|---|---|---|---|
| **Length with (2) ends** | 51" | 75" | 99" |
| **Length without ends** | 48" | 72" | 96" |
| **Height with ends** | 53" | 53" | 53" |
| **Height without ends** | 52-1/2" | 52-1/2" | 52-1/2" |
| **Depth with ends** | 40" | 40" | 40" |
| **Depth without ends** | 38-7/8" | 38-7/8" | 38-7/8" |
| **Endless Design** | YES | YES | YES |

(Dimensions are +/-1/4")

• Specification subject to change without notice

Howard-McCray

**40E Series - Endless Design**
**Curved Glass - Fish and Poultry**

# Standard Specifications and Optional Features

| | |
|---|---|
| **CONSTRUCTION**<br>UL Classified to ANSI/NSF 7<br>Foamed in place CFC free foam<br>Heavy gauge steel super structure<br>Single duty display<br>Endless design allows for continuous line up<br>Drain is included for cleaning<br>Extra wide double bend curved glass (*enhances product display)* | **FINISHES**<br>Grey finish extrusion on doors and door tracks<br>Designer white exterior front and ends<br>Trim<br>Stainless steel heavy gauge top– 13-3/4" W<br>Rear of unit is stainless steel brush finish at top<br>Bottom rear is designer white aluminum |
| **INTERIOR**<br>White interior includes ends<br>Full length white aluminum floor *(main deck area)*<br>Air insulated baffle *(prevents moisture from dripping into display area)*<br>Stainless steel individual ice pans | **REFRIGERATION**<br>Copevap system eliminates need for condensate pan<br>R134a expansion valve system<br>Gravity coil located at inside top of unit<br>Self contained system<br>Temperature and defrost electronically controlled<br>Remotes available |
| **EXTERIOR**<br>Double pane rear removable doors<br>Rear doors use the McGlide door system** *(for easy access)*<br>Removable front panel<br>Removable rear grille for easy servicing<br>1-1/2" removable end panels<br>Front bumper 2"- gray | **LIGHTING**<br>1 Row of T8 lighting at top of unit<br><br>****McGlide door system is built with a extra tight door jam which helps seal the door tight when closed and prevents cold air from leaving the unit saving energy costs.*** |
| **ELECTRICAL REQUIREMENTS**<br>115V/60Hz/1Ph<br>Hard wired<br>UL/CUL listed<br>115V-12AMP general purpose receptacle *(wired separately)* | ***Important Note:* All refrigerated cases are designed to operate in an environment of 75 degrees and 55% relative humidity.**<br>***Important Note:* Product must be cooled before being displayed within the case.**<br>***Ice Required* (32 lbs per foot)** |

## OPTIONAL FEATURES

| | |
|---|---|
| Scale stand<br>Paper cutter<br>Stainless steel, laminate, or paint<br>Mirrored doors<br>Stainless steel mezzanine shelf | Lights for mezzanine shelf<br>Drop work shelf<br>Door locks<br>Digital thermometer<br>Ice barrier – 4” |

c UL us LISTED  CLASSIFIED UL EPH ANSI/NSF 7

***A Division of HMC Enterprises LLC*** • *2501 Grant Avenue • Philadelphia, PA 19114 USA*
*(215) 464-6800 • 1-800-344-8222 • Fax (215) 969-4890 • E-Mail: sales@howardmccray.com • www.howardmccray.com*

Howard-McCray

**40E Series - Endless Design**
**Curved Glass - Fish and Poultry**

# Technical Data

| Model # | Self contained | SC-CFS40E-4C | SC-CFS40E-6C | SC-CFS40E-8C |
|---|---|---|---|---|
| | Remote | R-CFS40E-4C | R-CFS40E-6C | R-CFS40E-8C |
| **Length with (2) ends** | | 51" | 75" | 99" |
| **Length without ends** | | 48" | 72" | 96" |
| **Height with ends** | | 53" | 53" | 53" |
| **Height without ends** | | 52-1/2" | 52-1/2" | 52-1/2" |
| **Depth with ends** | | 40" | 40" | 40" |
| **Depth without ends** | | 38-7/8" | 38-7/8" | 38-7/8" |
| **Endless design** | | YES | YES | YES |
| **(Dimensions are +/- 1/4")** | | | | |
| **Operating temperature** | | 36˚F to 40˚F | 36˚F to 40˚F | 36˚F to 40˚F |
| **Refrigerant** (expansion valve) | Self contained | R134a | R134a | R134a |
| **Compressor size- HP** | Self contained | 1/4 | 1/4 | 1/3 |
| **Electronic control settings** | | | | |
| **@ 75˚F, 55%RH** | CUT IN | 40 | 40 | 40 |
| | CUT OUT | 36 | 36 | 36 |
| **Defrost per day (24 hours)** | Air Defrost | 1 per day | 1 per day | 1 per day |
| **BTU's at +20˚F Evap. Temp.** | Remote | 820 | 1230 | 1640 |
| **Voltage** | | 115V | 115V | 115V |
| **Amperage** | Self Contained | 6.0A | 6.4A | 9.1A |
| **Amperage- lights only** | Remote | 0.8A | 1.3A | 1.6A |
| **Cord and plug** | | No | No | No |
| **Exterior color** | | White | White | White |
| **Interior color** | | Stainless | Stainless | Stainless |
| **Inside end panels** | | White | White | White |
| **Floors** | | White | White | White |
| **# of top doors** | | 2 | 2 | 4 |
| **Door size** | | | | |
| **# of coils** | | 1 | 1 | 1 |
| **Bottom storage** | | No | No | No |
| **Front glass** | | Curved | Curved | Curved |
| **Main deck shelf** | | N/A | N/A | N/A |
| **Shelf size** | | 23-1/2"X32-5/8" | 23-1/2"X32-5/8" | 23-1/2"X32-5/8" |
| **Cubic capacity ($ft^3$)** | | 24.5 | 36.8 | 49 |
| **Mezzanine- shelf** | | Optional | Optional | Optional |

## SHIPPING INFORMATION

| | | | | |
|---|---|---|---|---|
| **Height** | | 58" | 58" | 58" |
| **Depth** | | 44" | 44" | 44" |
| **Length** | | 61" | 87" | 109" |
| **Gross weight** | Self contained | 530# | 741# | 897# |
| | Remote | 497# | 693# | 832# |
| **Cubic feet** | | $89ft^3$ | $128ft^3$ | $164ft^3$ |

- **Cases are designed to operate at 75 degrees Fahrenheit and 55% relative humidity**
- **Cases are equipped with washout drains; check your local building codes for connection requirements.**
- **Specification subject to change without notice**

***A Division of HMC Enterprises LLC*** • *2501 Grant Avenue • Philadelphia, PA 19114 USA*
*(215) 464-6800 • 1-800-344-8222 • Fax (215) 969-4890 • E-Mail: sales@howardmccray.com • www.howardmccray.com*

Howard-McCray

**40E Series - Endless Design**
**Curved Glass - Fish and Poultry**

# Technical Data • Side View • Plan View

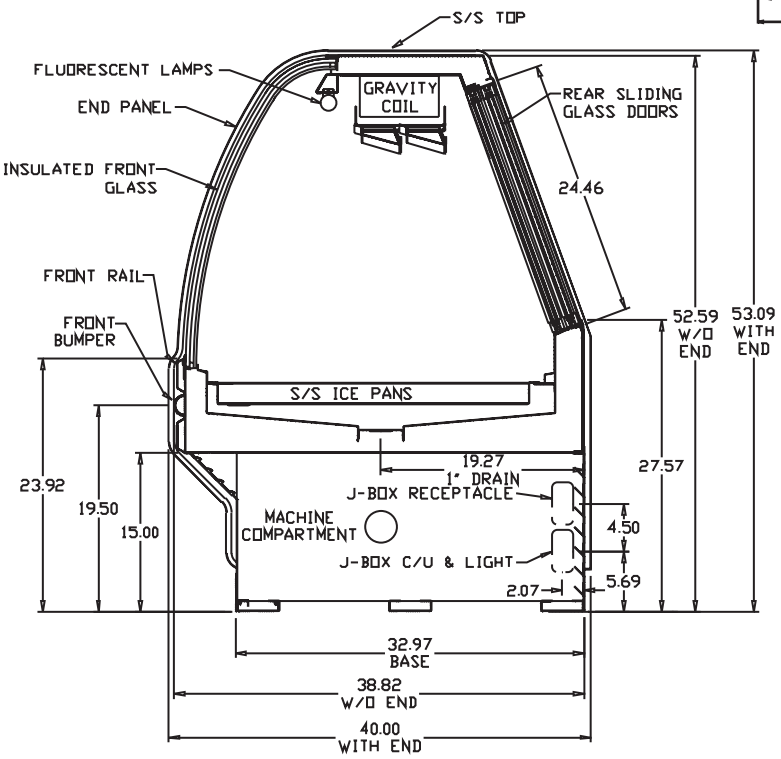


Cross Section

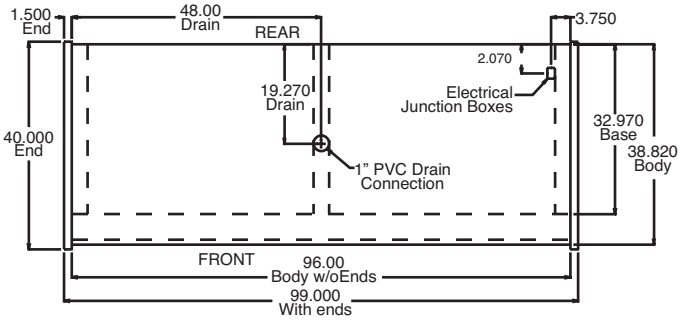


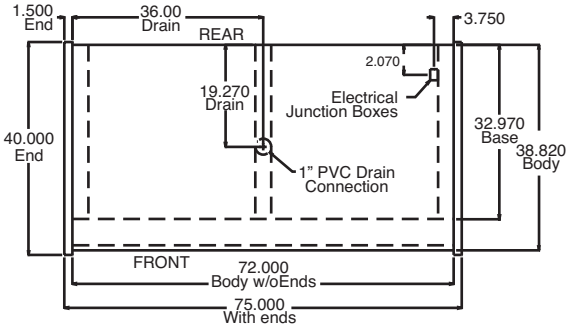


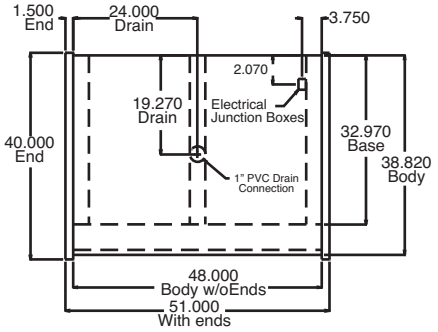


Plan Views


***A Division of HMC Enterprises LLC*** *• 2501 Grant Avenue • Philadelphia, PA 19114 USA*
*(215) 464-6800 • 1-800-344-8222 • Fax (215) 969-4890 • E-Mail: sales@howardmccray.com • www.howardmccray.com*